iiyama
Visual&Technology

USER MANUAL

ProLite

LCD Monitor

ENGLISH

DEUTSCH

FRANCAIS

NEDERLANDS

日本語

ProLite E1902S
ProLite E1902WS
ProLite E1902WSV
ProLite B1902S

Thank you very much for choosing the iiyama LCD monitor.
We recommend that you take a few minutes to read carefully through this brief but comprehensive manual before installing and switching on the monitor. Please keep this manual in a safe place for your future reference.

ENERGY STAR

TCO Development

Congratulations!

The product you have just purchased carries the TCO'06 Media Displays label. This means that your display is designed and manufactured according to some of the strictest performance and environmental criteria in the world. The manufacturer of this display has selected it to be certified to TCO'06 Media Displays as a sign of usability, high performance and reduced impact on the natural environment.

Products certified to TCO´06 Media Displays are specifically designed for high quality reproduction of moving images. Features such as luminance, color rendition and response time are important when watching TV or working with media, graphics, web design and other applications that demand outstanding moving images. *

Other features of TCO'06 Media Displays :

Ergonomics

- Good visual ergonomics and image quality in order to reduce vision and strain problems. Criteria for luminance, contrast, resolution, reflectance, color rendition and response time.

Energy

- Energy saving mode – beneficial both for the user and the environment
- Electrical safety

Emissions

- Low electromagnetic fields surrounding the display

Ecology

- Product is designed for recycling. Manufacturer must have a certified environmental management system such as EMAS or ISO 14 001
- Restrictions on
  - o Chlorinated and brominated flame retardants and polymers
  - o Hazardous heavy metals such as cadmium, mercury, hexavalent chromium and lead.

All TCO labelled products are verified and certified by TCO Development, an independent third party labelling organization. For over 20 years, TCO Development has been at the forefront of moving the design of IT equipment in a more user-friendly direction. Our criteria are developed in collaboration with an international group of researchers, experts, users and manufacturers. Since the program's inception, TCO labelled products have grown in popularity and are now requested by users and IT-manufacturers all over the world.

Full specifications and lists of certified products can be found on our homepage – **www.tcodevelopment.com**

* For a display used primarily for conventional work tasks such as word processing, we recommend a display certified to our office display series TCO'03 Displays or later version.

TCO Development

Congratulations!

The display you have just purchased carries the TCO’03 Displays label. This means that your display is designed, manufactured and tested according to some of the strictest quality and environmental requirements in the world. This makes for a high performance product, designed with the user in focus that also minimizes the impact on our natural environment.

Some of the features of the TCO’03 Display requirements:

Ergonomics

- Good visual ergonomics and image quality in order to improve the working environment for the user and to reduce sight and strain problems. Important parameters are luminance, contrast, resolution, reflectance, colour rendition and image stability.

Energy

- Energy-saving mode after a certain time – beneficial both for the user and the environment
- Electrical safety

Emissions

- Electromagnetic fields
- Noise emissions

Ecology

- The product must be prepared for recycling and the manufacturer must have a certified environmental management system such as EMAS or ISO 14 001
- Restrictions on
  o chlorinated and brominated flame retardants and polymers
  o heavy metals such as cadmium, mercury and lead.

The requirements included in this label have been developed by TCO Development in cooperation with scientists, experts, users as well as manufacturers all over the world. Since the end of the 1980s TCO has been involved in influencing the development of IT equipment in a more user-friendly direction. Our labelling system started with displays in 1992 and is now requested by users and IT-manufacturers all over the world.

For more information, please visit
www.tcodevelopment.com

FCC DECLARATION OF CONFORMITY

Model Number: PL1902 / PL1902W
Trade Name: iiyama
Responsible party: Ampronix Inc.
Address: 8697 Research Dr. Irvine, CA.92618 U.S.A.
Telephone number: 949-788-9930

This device complies with Part 15 of the FCC Rules. Operation is subject to the following two conditions: (1) This device may not cause harmful interference, and (2) this device must accept any interference received, including interference that may cause undesired operation.

This device has been tested and found to comply with the limits for Class B Personal Computers and peripherals, pursuant to Part 15 of the FCC Rules. These limits are designed to provide reasonable protection against harmful interference when the device is operated in a residential environment. This device generates, uses and can radiate radio frequency energy, and if not installed and used in accordance with the instructions, may cause harmful interference to radio communications. However, there is no guarantee that interference will not occur in a particular installation. If you determine the device does cause harmful interference to radio or television reception (this may be determined by monitoring the interference while turning the device off and on), you are encouraged to try to correct the interference by one of the following measures:

- Reorient or relocate the receiving antenna.
- Increase the separation between the device and receiver.
- Connect the device into an outlet on a circuit different from that to which the receiver is connected.
- Consult the dealer or an experienced radio or TV technician for help.

To meet the FCC requirements, you should use a signal cable with ferrite core at both ends.

CAUTION Changes or modifications not expressly approved by iiyama could void the users authority to operate the device under FCC compliance regulations.

CANADIAN DEPARTMENT OF COMMUNICATIONS COMPLIANCE STATEMENT

This digital apparatus does not exceed the Class B limits for radio noise emissions from digital apparatus as set out in the radio interference regulation of the Canadian department of communications.

CE MARKING DECLARATION OF CONFORMITY

This LCD monitor complies with the requirements of the EC Directive 89/336/EEC “EMC Directive” and 73/23/EEC “Low Voltage Directive” as amended by Directive 93/68/EEC.
The electro-magnetic susceptibility has been chosen at a level that gives correct operation in residential areas, business and light industrial premises and small-scale enterprises, inside as well as outside of the buildings. All places of operation are characterised by their connection to the public low voltage power supply system.

ENGLISH

- We reserve the right to change specifications without notice.
- All trademarks used in this user manual are the property of their respective owners.
- As an ENERGY STAR® Partner, iiyama has determined that this product meets the ENERGY STAR® guidelines for energy efficiency.

TABLE OF CONTENTS

FOR YOUR SAFETY 1
SAFETY PRECAUTIONS 1
SPECIAL NOTES ON LCD MONITORS 3
CUSTOMER SERVICE 3
CLEANING 3

BEFORE YOU OPERATE THE MONITOR 4
FEATURES 4
CHECKING THE CONTENTS OF THE PACKAGE 5
FITTING AND REMOVAL OF BASE : ProLite E1902S / E1902WS / E1902WSV 6
CONTROLS AND CONNECTORS : ProLite E1902S / E1902WS / E1902WSV 7
CONTROLS AND CONNECTORS : ProLite B1902S 8
CONNECTING YOUR MONITOR : ProLite E1902S / E1902WS / E1902WSV 9
CONNECTING YOUR MONITOR : ProLite B1902S 10
COMPUTER SETTING 11
ADJUSTING THE VIEWING ANGLE : ProLite E1902S / E1902WS / E1902WSV 11
ADJUSTING THE HEIGHT AND THE VIEWING ANGLE : ProLite B1902S 12
PANEL ROTATION : ProLite B1902S 12

OPERATING THE MONITOR 13
ADJUSTMENT MENU CONTENTS 14
SCREEN ADJUSTMENTS 22
POWER MANAGEMENT FEATURE 25

TROUBLE SHOOTING 26

APPENDIX 28
SPECIFICATIONS : ProLite E1902S 28
SPECIFICATIONS : ProLite E1902WS 29
SPECIFICATIONS : ProLite E1902WSV 30
SPECIFICATIONS : ProLite B1902S 31
DIMENSIONS : ProLite E1902S 32
DIMENSIONS : ProLite E1902WS / E1902WSV 32
DIMENSIONS : ProLite B1902S 32
COMPLIANT TIMING 33
CONNECTOR PIN ASSIGNMENT 34

ENGLISH

Regulatory information : The high efficiency LCD backlights used in this product contains 5mg or less of Mercury, the disposal of which may be regulated due to environmental considerations.
For disposal or recycling information, please contact your local authorities or the Electronic Industries Alliance (www.eiae.org).
This information is only for U.S.A..

We recommend recycling of used product. Please contact your dealer or iiyama service center. Recycle information is obtained via the Internet, using the address:
http://www.iiyama.com
You can access the Web page of different countries from there.

FOR YOUR SAFETY

SAFETY PRECAUTIONS

ENGLISH

WARNING

STOP OPERATING THE MONITOR WHEN YOU SENSE TROUBLE

If you notice any abnormal phenomena such as smoke, strange sounds or fumes, unplug the monitor and contact your dealer or iiyama service center immediately. Further use may be dangerous and can cause fire or electric shock.

NEVER REMOVE THE CABINET

High voltage circuits are inside the monitor. Removing the cabinet may expose you to the danger of fire or electric shock.

DO NOT PUT ANY OBJECT INTO THE MONITOR

Do not put any solid objects or liquids such as water into the monitor. In case of an accident, unplug your monitor immediately and contact your dealer or iiyama service center. Using the monitor with any object inside may cause fire, electric shock or damage.

INSTALL THE MONITOR ON A FLAT, STABLE SURFACE

The monitor may cause an injury if it falls or is dropped.

DO NOT USE THE MONITOR NEAR WATER

Do not use where water may be splashed or spilt onto the monitor as it may cause fire or electric shock.

OPERATE UNDER THE SPECIFIED POWER SUPPLY

Be sure to operate the monitor only with the specified power supply. Use of an incorrect voltage will cause malfunction and may cause fire or electric shock.

PROTECT THE CABLES

Do not pull or bend the power cable and signal cable. Do not place the monitor or any other heavy objects on the cables. If damaged, the cables may cause fire or electric shock.

ADVERSE WEATHER CONDITIONS

It is advisable not to operate the monitor during a heavy thunder storm as the continual breaks in power may cause malfunction. It is also advised not to touch the plug in these circumstances as it may cause electric shock.

CAUTION

INSTALLATION LOCATION

Do not install the monitor where sudden temperature changes may occur, or in humid, dusty or smoky areas as it may cause fire, electric shock or damage. You should also avoid areas where the sun shines directly on the monitor.

DO NOT PLACE THE MONITOR IN A HAZARDOUS POSITION

The monitor may topple and cause injury if not suitably located. Please also ensure that you do not place any heavy objects on the monitor, and that all cables are routed such that children may not pull the cables and possibly cause injury.

MAINTAIN GOOD VENTILATION

Ventilation slots are provided to keep the monitor from overheating. Covering the slots may cause fire. To allow adequate air circulation, place the monitor at least 10 cm (or 4 inches) from any walls. Do not remove the tilt stand when operating the monitor. Ventilation slots on the back of the cabinet will be blocked and the monitor may overheat if the stand is removed. This may cause fire or damage. Operating the monitor on its back, side, upside down or on a carpet or any other soft material may also cause damage.

DISCONNECT THE CABLES WHEN YOU MOVE THE MONITOR

When you move the monitor, turn off the power switch, unplug the monitor and be sure the signal cable is disconnected. If you do not disconnect them, it may cause fire or electric shock.

UNPLUG THE MONITOR

If the monitor is not in use for a long period of time it is recommended that it is left unplugged to avoid accidents.

HOLD THE PLUG WHEN DISCONNECTING

To disconnect the power cable or signal cable, always pull it by the plug. Never pull on the cable itself as this may cause fire or electric shock.

DO NOT TOUCH THE PLUG WITH WET HANDS

Pulling or inserting the plug with wet hands may cause electric shock.

WHEN YOU INSTALL THE MONITOR ON YOUR COMPUTER

Be sure the computer is strong enough to hold the weight of the monitor, otherwise, you may damage your computer.

DO NOT PUT FLOPPY DISKS NEAR THE SPEAKERS

Magnetically recorded data, such as on a floppy disk, may become corrupted by the magnetic field produced by the speakers if the disks are placed on or near the speakers.

OTHERS

ERGONOMIC RECOMMENDATIONS

To eliminate eye fatigue, do not operate the monitor against a bright background or in a dark room. For optimal viewing comfort, the monitor should be just below eye level and 40-60 cm (16-24 inches) away from your eyes. When using the monitor over a prolonged time, a ten minute break every hour is recommended as looking at the screen continuously can cause eye strain.

SPECIAL NOTES ON LCD MONITORS

The following symptoms are normal with LCD monitors and do not indicate a problem.

NOTE

- When you first turn on the LCD monitor, the picture may not fit in the display area because of the type of computer that is used. In this case, adjust the picture position to the correct position.
- Due to the nature of the backlight, the screen may flicker during initial use. Turn off the Power Switch and then turn it on again to make sure the flicker disappears.
- You may find slightly uneven brightness on the screen depending on the desktop pattern you use.
- Due to the nature of the LCD screen, an afterimage of the previous screen may remain after switching the image, when the same image is displayed for hours. In this case, the screen is recovered slowly by changing the image or turning off the Power Switch for hours.
- Contact your dealer or iiyama service center for the backlight replacement when the screen is dark, flickering or not lighting up. Never attempt to replace it by yourself.

CUSTOMER SERVICE

NOTE

- The fluorescent light used in the LCD monitor may have to be periodically replaced. For the warranty coverage on this component, please check with local iiyama service center.
- If you have to return your unit for service and the original packaging has been discarded, please contact your dealer or iiyama service center for advice or replacement packaging.

CLEANING

WARNING

- If you drop any materials or liquids such as water into the monitor when cleaning, unplug the power cable immediately and contact your dealer or iiyama service center.

CAUTION

- For safety reasons, turn off the power switch and unplug the monitor before you clean it.

NOTE

- To protect the LCD panel, do not scratch or rub the screen with a hard object.
- Never use any of the following strong solvents. These will damage the cabinet and the LCD screen.

Thinner	Spray-type cleaner
Benzine	Wax
Abrasive cleaner	Acid or Alkaline solvent

- Touching the cabinet with any product made from rubber or plastic for a long time may cause degeneration or loss of paint on the cabinet.

CABINET Stains can be removed with a cloth lightly moistened with a mild detergent solvent. Then wipe the cabinet with a soft dry cloth.

LCD SCREEN Periodic cleaning with a soft dry cloth is recommended. Don't use tissue paper etc. because these will damage the LCD screen.

BEFORE YOU OPERATE THE MONITOR

[Stopper] : ProLite B1902S

Please stand the monitor and then remove the stopper on the back of the stand slowly.

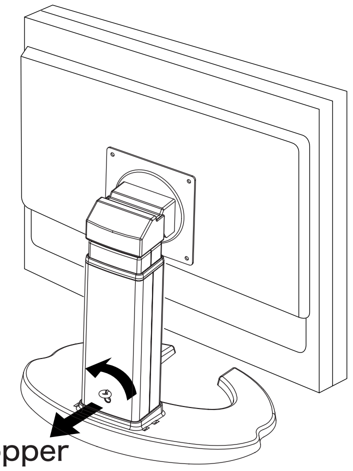

ENGLISH

FEATURES

- 48cm (19") TFT Color LCD Monitor
- Supports Resolutions up to 1280 × 1024 : ProLite E1902S / B1902S
- Supports Resolutions up to 1440 × 900 : ProLite E1902WS / E1902WSV
- High Contrast 1000:1 / High Brightness 300cd/m^2 / Quick Response Time 2ms (Gray to Gray): ProLite E1902S / B1902S
- High Contrast 1000:1 / High Brightness 400cd/m^2 / Quick Response Time 2ms (Gray to Gray) : ProLite E1902WS / E1902WSV
- Multi-Color Control
  Supports sRGB International Standard
- Gamma Control
  Clear Display for Moving Pictures & Photographs
- Digital Character Smoothing
- Automatic Set-up
- Stereo Speakers
  2 × 1W Stereo Speakers & Headphone Connector
- Economy Mode
  Reduced Power Consumption
- Plug & Play VESA DDC2B Compliant
  Windows® 95/98/2000/Me/XP/Vista Compliant
- DDC/CI Compliant
- Power Management (ENERGY STAR® and VESA DPMS Compliant)
- Ergonomic Design
  ProLite E1902S / B1902S : TCO '03 and TÜV-Ergonomics Approved
  ProLite E1902WS / E1902WSV : TCO '06 and TÜV-Ergonomics Approved
- Digital Input (DVI-D, HDCP Compliant) for Clear Display
- 90° Panel Rotation Design : ProLite B1902S
- VESA Mounting Standard (100mm×100mm) Compliant

CHECKING THE CONTENTS OF THE PACKAGE

The following accessories are included in your package. Check to see if they are enclosed with the monitor. If anything is missing or damaged, please contact your local iiyama dealer or regional iiyama office.

- Power Cable *1
- D-Sub Signal Cable
- DVI-D Signal Cable *2
- Audio Cable
- Stand *3
- Cable Holder
- User Manual

CAUTION

*1 The rating of the Power Cable enclosed in 120V area is 10A/125V. If you are using a power supply higher than this rating, then a power cable with a rating of 10A/250V must be used.
However, all guarantees and warranties are void for any problems or damage caused by a power cable not supplied by iiyama.

*2 Accessory for ProLite E1902S / E1902WS / B1902S

*3 Accessory for ProLite E1902S / E1902WS / E1902WSV

<softOSM>

The Desktop softOSM software complies with the DDC/CI standard and can be downloaded from the iiyama website.

www.iiyama.com

softOSM Software Functions

- Easy access to the range of user adjustments can be via the softOSM Software rather than the buttons located on the display itself.
- The communication between software and display occurs through the Display Cable provided; hence no special cabling is required.
- Screen rotation features can also be controlled via the softOSM Software switching on the fly between Landscape and Portrait. Please note that a suitable graphics card with adequate performance must be used in conjunction with this feature. : Available for ProLite B1902S only.

Compatible with Windows 98, 2000, XP and Vista.

FITTING AND REMOVAL OF BASE : ProLite E1902S / E1902WS / E1902WSV

CAUTION

- Install the stand on a stable surface. The monitor may cause injury or damage if it falls or is dropped.
- Do not give a strong impact to the monitor. It may cause damage.
- Unplug the monitor before installation to avoid electric shock or damage.

ENGLISH

<Install>

Hold the monitor and push the post down into the stand.

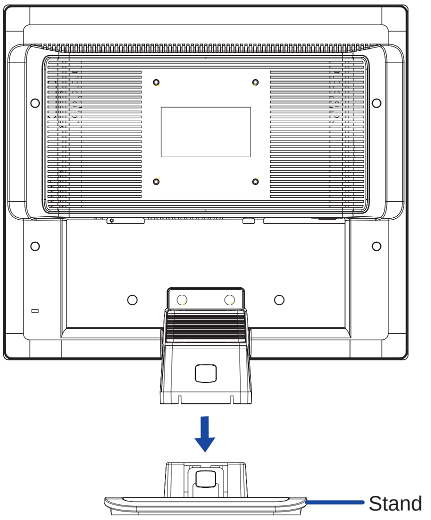

<Remove>

Press the stopper at the back of the stand and remove the stand from the post.

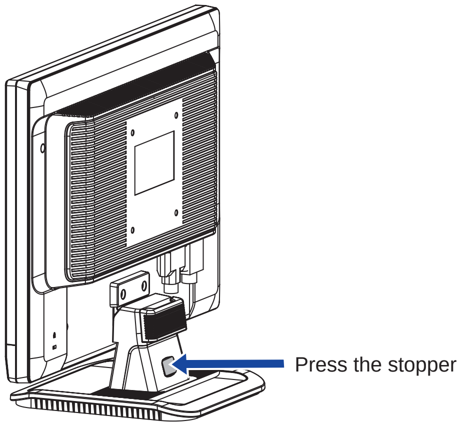

CONTROLS AND CONNECTORS : ProLite E1902S / E1902WS / E1902WSV

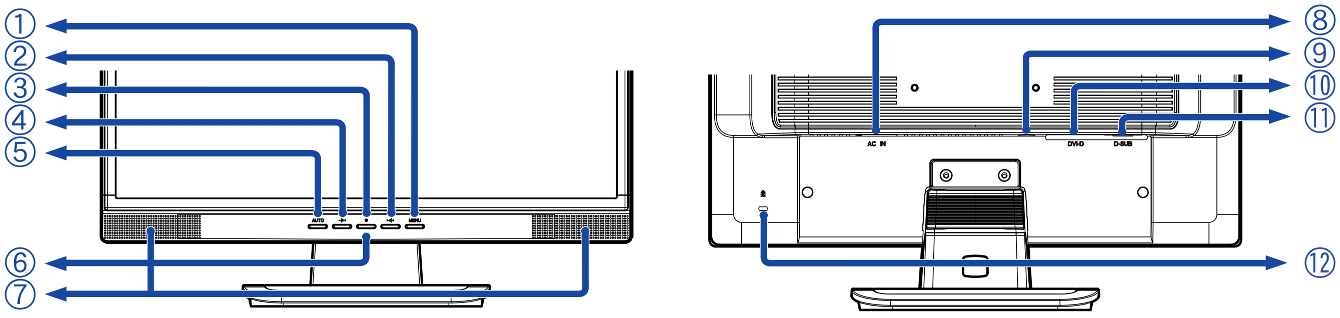

<Front> <Back>

A Menu Button (MENU)

B + Button (> 🔈 +)

C Power Switch (⏻)

D – Button (- 🔈 <)

E Auto Button (AUTO)

F Power Indicator

NOTE Blue: Normal operation

Orange: Power Management

■ Auto (Signal Select)

When no signal is received from the system, the display enters into its Power Management Mode reducing power consumption to < than 2W.

■ Analog / Digital (Signal Select)

The monitor enters into power management mode which reduces the power consumption to less than 2W when receiving no horizontal and/or vertical sync signal.

G Speakers

H AC Connector (AC IN)

I Audio Connector (((•))←)

J DVI-D 24pin Connector (DVI-D)*

K D-sub mini 15pin Connector (D-SUB)

L Keyhole for Security Lock

NOTE You can fasten a security lock and cable to prevent the monitor from being removed without your permission.

* Available for ProLite E1902S / E1902WS only.

CONTROLS AND CONNECTORS : ProLite B1902S

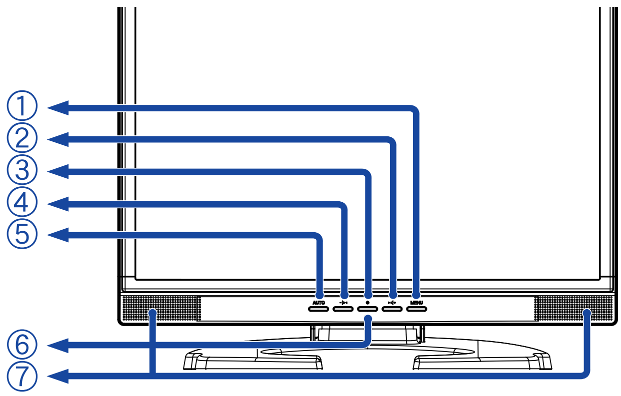

<Front>

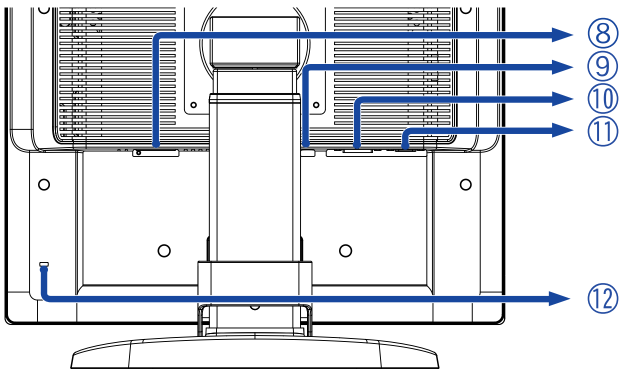

<Back>

A Menu Button (MENU)

B + Button (> 🔈 +)

C Power Switch (⏻)

D – Button (- 🔈 <)

E Auto Button (AUTO)

F Power Indicator

NOTE Blue: Normal operation
Orange: Power Management

■ Auto (Signal Select)
When no signal is received from the system, the display enters into its Power Management Mode reducing power consumption to < than 2W.

■ Analog / Digital (Signal Select)
The monitor enters into power management mode which reduces the power consumption to less than 2W when receiving no horizontal and/or vertical sync signal.

G Speakers

H AC Connector (AC IN)

I Audio Connector (((•))←)

J DVI-D 24pin Connector (DVI-D)

K D-sub mini 15pin Connector (D-SUB)

L Keyhole for Security Lock

NOTE You can fasten a security lock and cable to prevent the monitor from being removed without your permission.

CONNECTING YOUR MONITOR : ProLite E1902S / E1902WS / E1902WSV

A Ensure that both the computer and the monitor are switched off.

B Connect the computer to the monitor with the signal cable. (See page 34 for CONNECTOR PIN ASSIGNMENT.)

C Connect the monitor to the audio equipment with the Audio Cable when using the audio features.

D Connect the Power Cable to the monitor first and then to the power supply.

NOTE
- The signal cables used for connecting the computer and monitor may vary with the type of computer used. An incorrect connection may cause serious damage to both the monitor and the computer. The cable supplied with the monitor is for a standard 15 pin D-Sub connector. If a special cable is required please contact your local iiyama dealer or regional iiyama office.
- For connection to Macintosh computers, contact your local iiyama dealer or regional iiyama office for a suitable adaptor.
- Make sure you tighten the finger screws at each end of the signal cable.

[Example of Connection]

<Back>

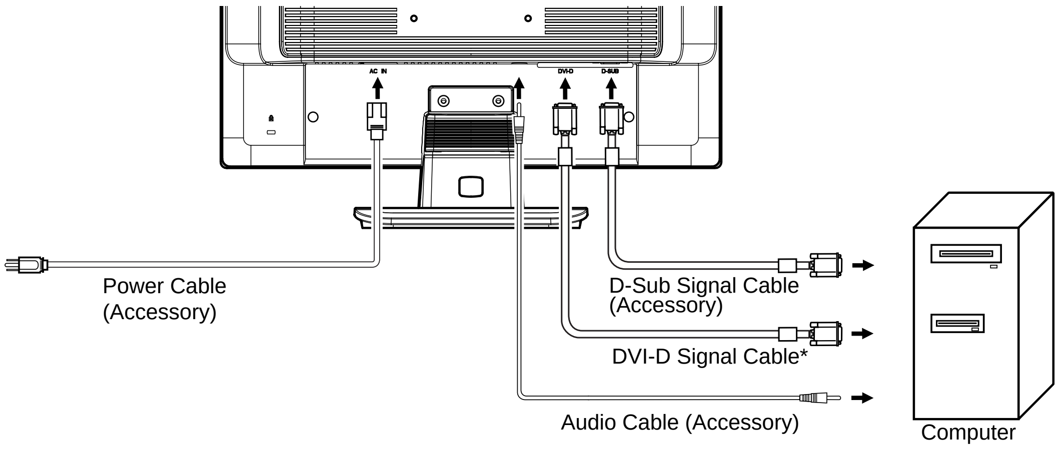

* Available for ProLite E1902S / E1902WS only.

[Fitting of Cable Holder]

A Collect cables at the back of the stand.

B Position the Cable Holder at the base of the stand column by inserting the 'tabs' into the guide holes. Apply gentle pressure downwards to secure.

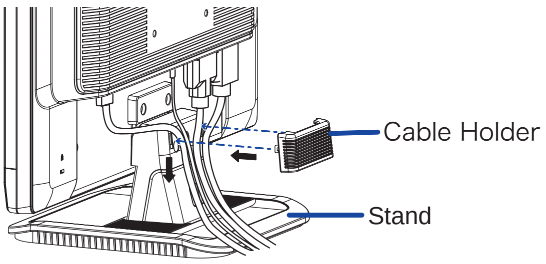

[Removal of Cable Holder]

A Remove Cable Holder by sliding up the base column.

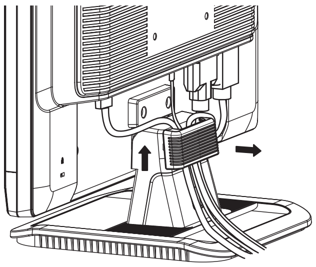

CONNECTING YOUR MONITOR : ProLite B1902S

A Ensure that both the computer and the monitor are switched off.

B Connect the computer to the monitor with the signal cable. (See page 34 for CONNECTOR PIN ASSIGNMENT.)

C Connect the monitor to the audio equipment with the Audio Cable when using the audio features.

D Connect the Power Cable to the monitor first and then to the power supply.

NOTE

- The signal cables used for connecting the computer and monitor may vary with the type of computer used. An incorrect connection may cause serious damage to both the monitor and the computer. The cable supplied with the monitor is for a standard 15 pin D-Sub connector. If a special cable is required please contact your local iiyama dealer or regional iiyama office.
- For connection to Macintosh computers, contact your local iiyama dealer or regional iiyama office for a suitable adaptor.
- Make sure you tighten the finger screws at each end of the signal cable.

[Example of Connection]

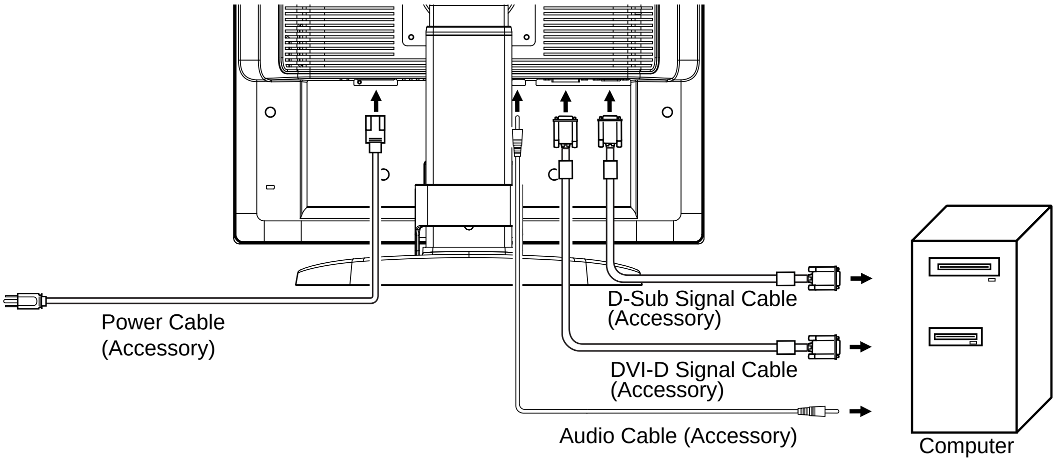

[Fitting of Cable Holder]

A Collect cables at the back of the stand.

B Inserting the tabs of the Cable Holder into guide holes of the stand.(B)

C Place the Cable Holder by inserting the tabs of the Cable Holder into guide holes of the stand.(C)

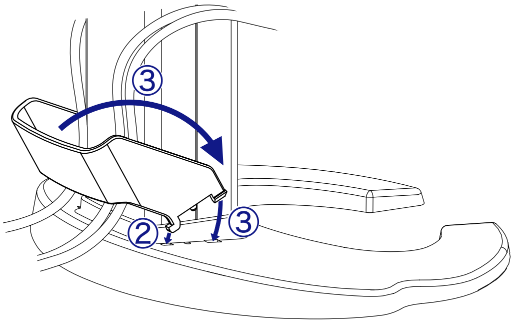

[Removal of Cable Holder]

A Push the both sides and tilt back the Cable Holder.

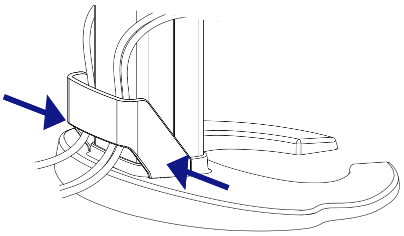

ENGLISH

ENGLISH

COMPUTER SETTING

■ Signal Timing

Change to the desired signal timing listed on page 33: COMPLIANT TIMING.

■ Windows 95/98/2000/Me/XP/Vista Plug & Play

The iiyama LCD monitor complies with DDC2B of VESA standard. The Plug & Play function runs on Windows 95/98/2000/Me/XP/Vista by connecting the monitor to DDC2B compliant computer with the Signal Cable supplied. Windows 95/98/2000/Me/XP Monitor Information File for iiyama monitors may be necessary for your computer and obtained via the Internet, using the address:

http://www.iiyama.com

NOTE

■ For additional information on how to download the driver for your monitor, please access one of the internet sites noted above.

■ Monitor Drivers are not required in most cases for Windows Vista, Macintosh or Unix operating systems. For further information, please contact your computer dealer first for advice.

ADJUSTING THE VIEWING ANGLE : ProLite E1902S / E1902WS / E1902WSV

■ For optimal viewing it is recommended to look at the full face of the monitor.

■ Hold the stand so that the monitor does not topple when you change the monitor's angle.

■ You are able to adjust the monitor's angle up to 20 degrees upward, 5 degrees downward.

■ In order to ensure a healthy and relaxed body position when using the monitor at visual display workstations, it is recommended that the adjusted tilt angle should not exceed 10 degrees. Adjust the monitor's angle to your own preference.

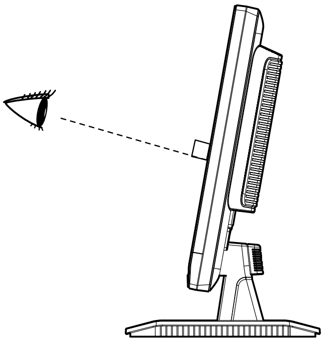

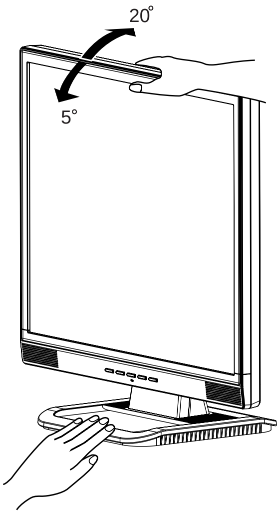

NOTE

■ Do not touch the LCD screen when you change the angle. It may cause damage or break the LCD screen.

■ Careful attention is required not to catch your fingers or hands when you change the angle.

ADJUSTING THE HEIGHT AND THE VIEWING ANGLE : ProLite B1902S

- For optimal viewing it is recommended to look at the full face of the monitor, then adjust the monitor's Height and angle to your own preference.
- Hold the stand so that the monitor does not topple when you change the monitor's angle.
- you are able to adjust the monitor's height up to 110mm,angle up to 35degrees right and left,25 degrees upward,5 degrees downward.

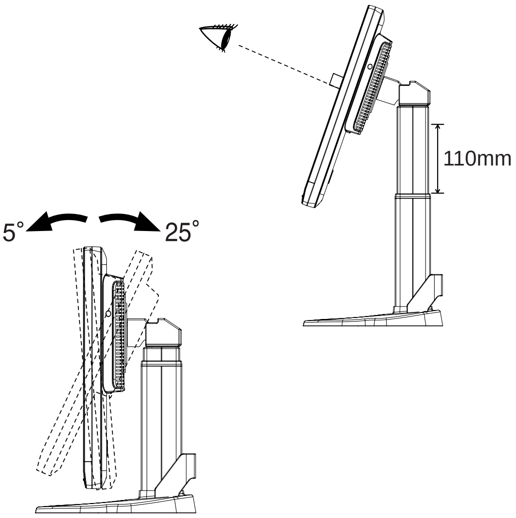

NOTE
- Do not touch the LCD screen when you change the angle. It may cause damage or break the LCD screen.
- Careful attention is required not to catch your fingers or hands when you change the angle.

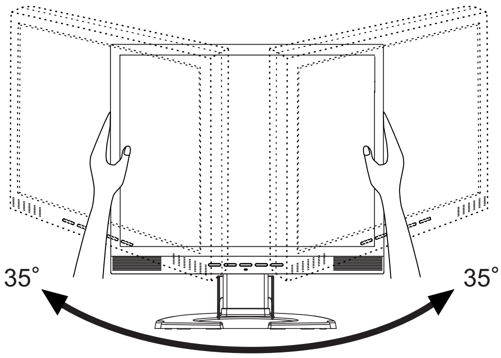

ENGLISH

PANEL ROTATION : ProLite B1902S

A Ajust the monitor's height to the maximum.

B Rotate the panel 90 degrees.

Portrait: Turn clockwise.

Landscape: Turn counter clockwise.

NOTE
- Attempting to rotate without fully extending upward may cause damage to stand.
- Screen Rotation should be accessed via the softOSM software.

C Ajust the monitor's angle to your preference.

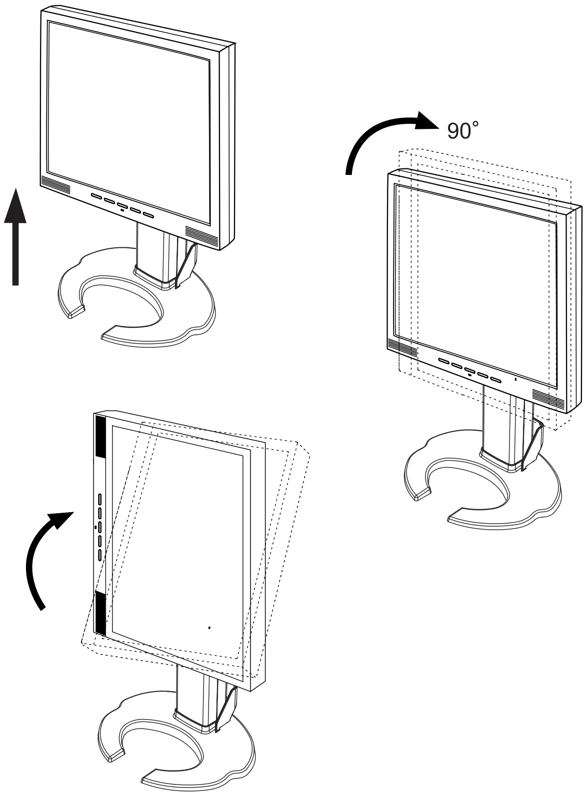

OPERATING THE MONITOR

To create the best picture, your iiyama LCD monitor has been preset at the factory with the COMPLIANT TIMING shown on page 33. You are also able to adjust the picture by following the button operation shown below. For more detailed adjustments, see page 22 for SCREEN ADJUSTMENTS.

(Press the Menu Button to start the On Screen Display feature. There are additional Menu pages which can be switched by using the +/– Buttons.

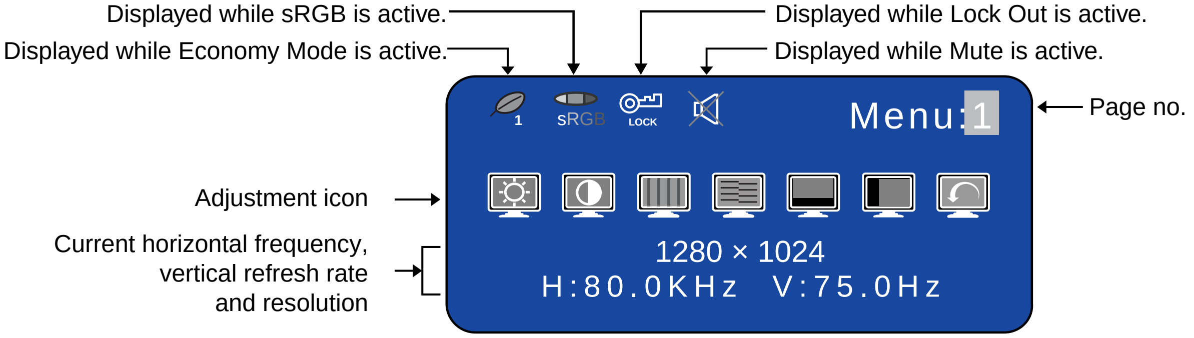

B Select the Menu page which contains the adjustment icon relating to the adjustment you want to make. Press the Menu Button again. Then, use the +/– Buttons to highlight the desired adjustment icon. Press the Menu Button again.

C Use the +/– Buttons to make the appropriate adjustment or setting.

For example, to correct for vertical position, select Menu page number 1 and then press the Menu Button. Then, select (V-Position) by using the +/– Buttons.

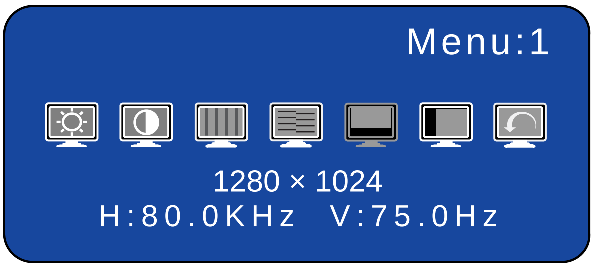

An adjustment scale appears after you press the Menu Button. Use the +/– Buttons to change the vertical position settings. The vertical position of the overall display should be changing accordingly while you are doing this.

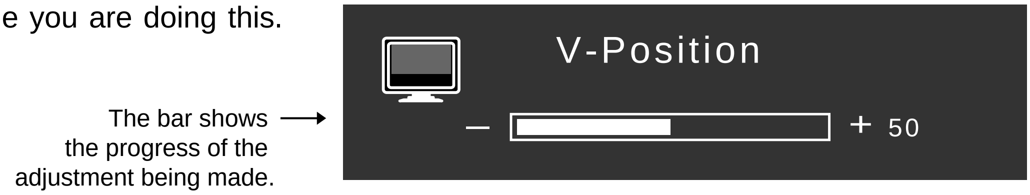

NOTE

- When button operations are aborted during adjustment, On-Screen Display disappears when the time set for the OSD Off Timer has passed. The Auto Button can be used to exit OSD window immediately.
- Any changes are automatically saved in the memory when the On Screen Display disappears. Turning off the power should be avoided while using the Menu.
- Adjustments for Clock, Phase and Position are saved for each signal timing. Except for these adjustments, all other adjustments have only one setting which applies to all signal timings.

ADJUSTMENT MENU CONTENTS

Direct

You can skip the Menu pages and display an adjustment scale directly by using the following button operations.

- Brightness / Contrast / Volume: To display direct menu press either of the +/- Buttons. Continue to use the +/- Buttons to select the adjustments required.

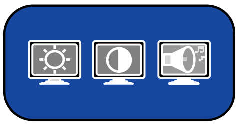

- Auto Set-up: Press the Auto Button when the Menu is not displayed.
- Volume (Mute): With the OSD menu off, the pressing and holding of the Menu Button for 1-2 seconds will enable/disable the Audio Mute facility.
- Signal Select *: With the OSD menu off, pressing and holding the Auto Button for 1-2 seconds will switch the input signal from Analogue to Digital.
- Lock Out: With the OSD menu off, pressing and holding the Menu and '-' Buttons simultaneously for a period of at least 7 seconds will enable and disable the OSD Lock Out mode.

  is displayed while Lock Out is active.

* Available for ProLite E1902S / E1902WS / B1902S only.

Analog Input

Menu : 1
(Analog)

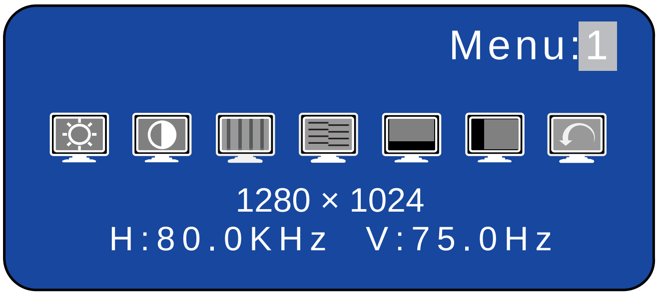

Adjustment Item		Problem / Option	Button to Press
Brightness *1	Direct	Too dark Too bright	+ −
Contrast	Direct	Too dull Too intense	+ −
Clock *2		To correct flickering text or lines	+ −
Phase *2		To correct flickering text or lines	+ −
V-Position		Too low Too high	+ −
H-Position		Too far to the left Too far to the right	+ −
Return to Menu		Highlight “Menu : 1” again.	

*1 Adjust the Brightness when you are using the monitor in a dark room and feel the screen is too bright.

*2 See page 22 for SCREEN ADJUSTMENTS.

Direct See page 14 for Direct adjustment.

Menu : 2
(Analog)

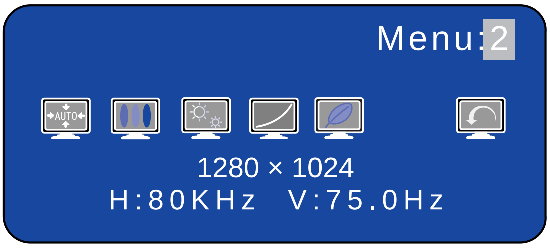

Adjustment Item	Problem / Option			Button to Press
Auto Set-up *3 Direct	NO	Return to Menu.		
	YES	Adjust Clock, Phase, V-Position and H-Position automatically.		
	Setting	Off	The Auto Set-up is not performed when the signal input is changed.	
		On	Adjust Clock, Phase, V-Position and H-Position automatically when the signal input is changed.	

NOTE
- The brightness of screen varies for several seconds during the adjustment.
- This function is not performed automatically when changing the signal input because the factory-preset of “Setting” in Auto Set-up is set to Off.

Adjustment Item	Problem / Option				Button to Press
Color Temp.	1	Color 1: 9300K			
	2	Color 2: 7500K			
	3	Color 3: 6500K			
	s	sRGB			
	(User)	MENU	R	Too weak	+
			G		
			B	Too strong	−

NOTE
- sRGB is an international standard which defines and unifies the difference of color appearance between equipment.
- You can not adjust the Gamma and Economy Mode during sRGB mode because those settings are locked.
- sRGB is displayed while sRGB is active.

Adjustment Item	Problem / Option	Button to Press
Sharpness	1 2 3 4 5	+ / −
	Adjust the picture quality at resolutions of less than 1280 × 1024 (ProLite E1902S / B1902S), 1440 × 900 (ProLite E1902WS / E1902WSV). You can change the picture quality from 1 to 5 (sharp to soft). Press the + Button to change the picture quality in numerical order. Press the – Button to change the picture quality in reverse numerical order.	

*3 For best results, use the Auto Set-up in conjunction with the adjustment pattern. See page 22 for SCREEN ADJUSTMENTS.

Direct See page 14 for Direct adjustment.

ENGLISH

Menu : 2
(Analog)

Adjustment Item	Problem / Option	
Gamma	Off	Normal
	Mode1	High contrast
	Mode2	Dark
Economy Mode	Off	Normal
	Mode1	Brightness of back-light is reduced.
	Mode2	Brightness of back-light is reduced more than Mode1.
NOTE ■ (leaf icon) is displayed while Economy Mode is active.		
Return to Menu	Highlight “Menu : 2” again.	

Menu : 3
(Analog)

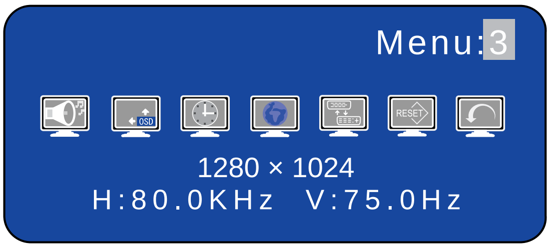

Adjustment Item	Problem / Option		Button to Press
Volume **Direct**	Too soft		+
	Too loud		–

NOTE ■ (mute icon) is displayed while Mute is active.

Adjustment Item	Problem / Option		Button to Press
OSD Position	1 2 3 4 5		+
	You can move the OSD display area to any one of the following 5 positions within the overall display:		–
	Press the + Button to move the OSD in numerical order. Press the – Button to move the OSD in reverse numerical order.		
OSD Off Timer	Set the OSD Off Timer for 3-60 seconds.		+ / –

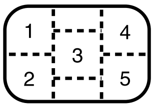

Adjustment Item				
Language	English	English	Español	Spanish
	Deutsch	German	Italiano	Italian
	Français	French	日本語	Japanese

Adjustment Item	Option	
Signal Select *1 **Direct**	Auto	Select the signal input automatically.
	Analog	Select the Analog input (D-SUB).
	Digital	Select the Digital input (DVI-D).

NOTE When both Analogue and Digital cables are connected, you can switch between them using the direct access facility described earlier. If only one input is present, this will automatically be selected. In Power Management Mode input switching is disabled.

Adjustment Item	Option	
Reset	NO	Return to Menu.
	YES	Factory-preset data is restored.
Return to Menu	Highlight "Menu : 3" again.	

*1 Available for ProLite E1902S / E1902WS / B1902S only.

Direct See page 14 for Direct adjustment.

Digital Input : Available for ProLite E1902S / E1902WS / B1902S only.

Menu : 1
(Digital)

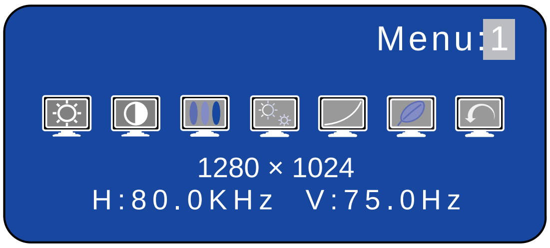

Adjustment Item		Problem / Option			Button to Press
Brightness *1	Direct	Too dark			+
		Too bright			–
Contrast	Direct	Too dull			+
		Too intense			–
Color Temp.		1	Color 1: 9300K		
		2	Color 2: 7500K		
		3	Color 3: 6500K		
		s	sRGB		
		User	MENU	R / G / B	Too weak + Too strong –

NOTE
- sRGB is an international standard which defines and unifies the difference of color appearance between equipment.
- You can not adjust the Gamma and Economy Mode during sRGB mode because those settings are locked.
- sRGB is displayed while sRGB is active.

Adjustment Item	Problem / Option		Button to Press
Sharpness	1 2 3 4 5		+ / –
	Adjust the picture quality at resolutions of less than 1280 × 1024 (ProLite E1902S / B1902S), 1440 × 900 (ProLite E1902WS). You can change the picture quality from 1 to 5 (sharp to soft). Press the + Button to change the picture quality in numerical order. Press the – Button to change the picture quality in reverse numerical order.		
Gamma	Off	Normal	
	Mode1	High contrast	
	Mode2	Dark	

*1 Adjust the Brightness when you are using the monitor in a dark room and feel the screen is too bright.

Direct See page 14 for Direct adjustment.

Menu : 1
(Digital)

Adjustment Item	Problem / Option	
Economy Mode	Off	Normal
	Mode1	Brightness of back-light is reduced.
	Mode2	Brightness of back-light is reduced more than Mode1.
NOTE ■ is displayed while Economy Mode is active.		
Return to Menu	Highlight “Menu : 1” again.	

Menu : 2
(Digital)

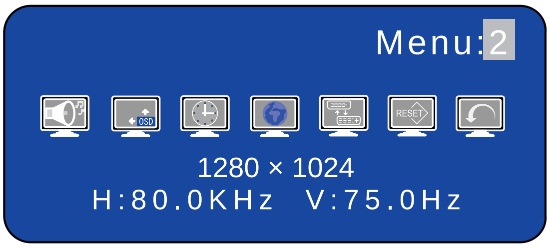

Adjustment Item	Problem / Option		Button to Press
Volume **Direct**	Too soft		+
	Too loud		–

NOTE ■ (mute icon) is displayed while Mute is active.

Adjustment Item	Problem / Option				Button to Press
OSD Position	1 2 3 4 5 You can move the OSD display area to any one of the following 5 positions within the overall display: Press the + Button to move the OSD in numerical order. Press the – Button to move the OSD in reverse numerical order.				+ / –
OSD Off Timer	Set the OSD Off Timer for 3-60 seconds.				+ / –
Language	English	English	Español	Spanish	
	Deutsch	German	Italiano	Italian	
	Français	French	日本語	Japanese	
Signal Select **Direct**	Auto	Select the signal input automatically.			
	Analog	Select the Analog input (D-SUB).			
	Digital	Select the Digital input (DVI-D).			

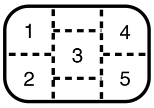

NOTE When both Analogue and Digital cables are connected, you can switch between them using the direct access facility described earlier. If only one input is present, this will automatically be selected. In Power Management Mode input switching is disabled.

Adjustment Item	Problem / Option	
Reset	NO	Return to Menu.
	YES	Factory-preset data is restored.
Return to Menu	Highlight “Menu : 2” again.	

Direct See page 14 for Direct adjustment.

ENGLISH

SCREEN ADJUSTMENTS

Adjust the image by following the procedure below to get the desired picture when selecting Analog input.

- The screen adjustments described in this manual are designed to set image position and minimize flicker or blur for the particular computer in use.
- ProLite E1902S / B1902S are designed to provide the best performance at resolution of 1280 × 1024, but can not provide the best at resolutions of less than 1280 × 1024 because the picture is automatically stretched to fit the full screen. It is recommended to operate at resolution of 1280 × 1024 in normal use.
- ProLite E1902WS / E1902WSV are designed to provide the best performance at resolution of 1440 × 900, but can not provide the best at resolutions of less than 1440 × 900 because the picture is automatically stretched to fit the full screen. It is recommended to operate at resolution of 1440 × 900 in normal use.
- Displayed text or lines will be blurred or irregular in thickness when the picture is stretched due to the screen enlargement process.
- It is preferable to adjust the image position and frequency with the monitor controls, rather than the computer software or utilities.
- Perform adjustments after a warm-up period of at least thirty minutes.
- Additional adjustments may be required after the Auto Set-up depending on the resolution or signal timing.
- The Auto Set-up may not work correctly when displaying the picture other than the screen adjustment pattern. In this case, manual adjustments are required.

There are two ways to adjust the screen. One way is automatic adjustment for Clock, Phase and Position. The other way is performing each adjustment manually.
Perform the Auto Set-up first when the monitor is connected to a new computer, or resolution is changed. If the screen has a flicker or blur, or the picture does not fit in the display area after performing the Auto Set-up, manual adjustments are required. Both adjustments should be made by using the screen adjustment pattern (Test.bmp) obtained via the IIYAMA web site (http://www.iiyama.com).

Adjust the image by following the procedure below to get the desired picture.
This manual explains adjustment under Windows 95/98/2000/Me/XP/Vista.

A Display the picture at the optimum resolution.

B Enter the Test.bmp (screen adjustment pattern) to wallpaper.

NOTE
- Consult the appropriate documentation for doing this.
- Test.bmp is made at resolution of 1280 × 1024. Set the display position to center in the wallpaper setting dialogue box. If you use Microsoft® PLUS! 95/98 cancel the setting of "Stretch desktop wallpaper to fit the screen".

[Adjustment pattern]

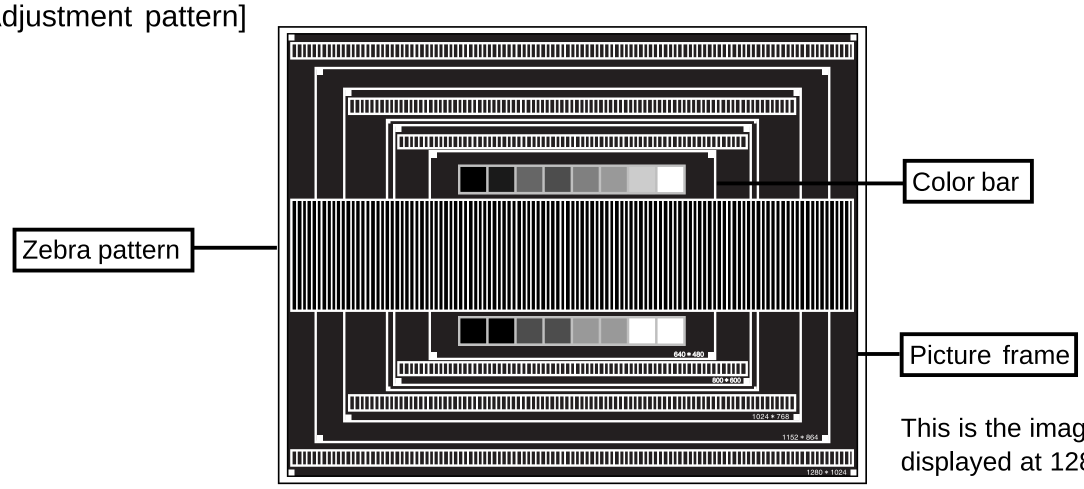

This is the image displayed at 1280 × 1024.

C **Press the Auto Button. (Auto Set-up)**

D **Adjust the image manually by following procedure below when the screen has a flicker or blur, or the picture does not fit in the display area after performing the Auto Set-up.**

E **Adjust the V-Position so that the top and bottom of the picture frame will fit to the display area.**

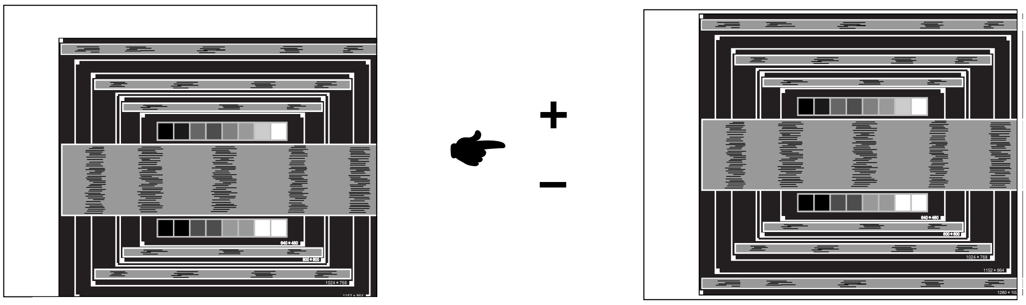

F **1) Adjust the H-Position so that the left side of the picture frame will move to the left edge of the display area.**

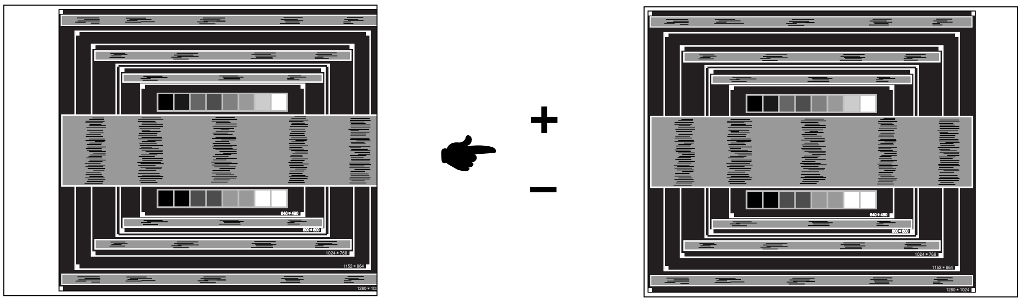

2) Stretch the right side of the picture frame to the right edge of the display area by adjusting the Clock.

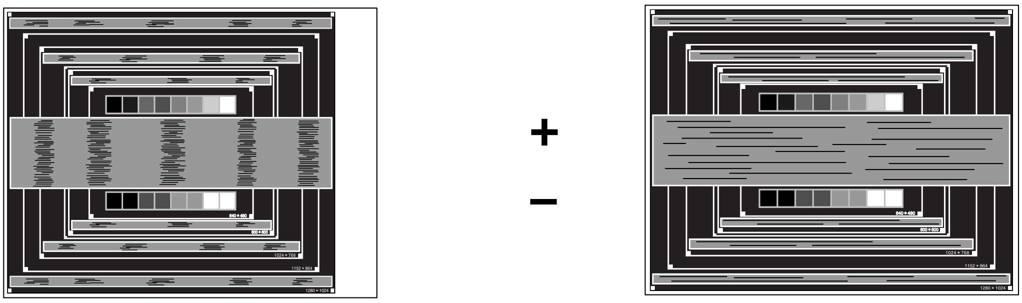

NOTE

- When the left side of the picture frame moves apart from the left edge of the display area during the Clock adjustment, adjust steps 1) and 2).
- Another way to make the Clock adjustment is to correct the vertical wavy lines in the zebra pattern.
- The picture may flicker during the Clock, H-Position and V-Position adjustment.
- In case the picture frame is bigger or smaller than the data display area after the Clock adjustment, repeat steps from C .

G Adjust the Phase to correct horizontal wavy noise, flicker or blur in the zebra pattern.

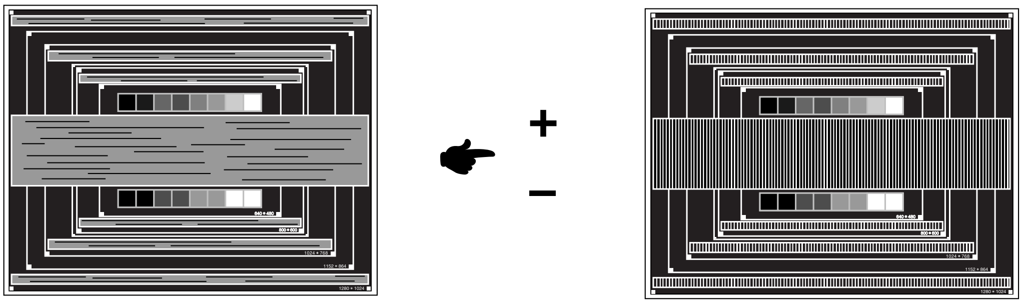

NOTE

- In case the strong flicker or blurs remain on a part of the screen, repeat steps F and G because the Clock may not be adjusted correctly. If the flicker or blurs still remain, set the refresh rate of computer to low (60Hz) and repeat steps from C again.
- Adjust the H-Position after the Phase adjustment if the horizontal position moves during the adjustment.

H Adjust the Brightness and Color Temp. to get the desired picture after you complete the Clock and Phase adjustments.
Put back your favorite wallpaper.

POWER MANAGEMENT FEATURE

The power management feature of this product complies with power saving requirement of ENERGY STAR® and VESA DPMS. When activated, it automatically reduces unnecessary power consumption of the monitor when your computer is not in use.

To use the feature, the monitor needs to be connected to a VESA DPMS compliant computer. There is a power management step the monitor takes as described below. The power management function, including any timer settings is configured by the operating system. Check your operating system manual for information on how this can be configured.

ENGLISH

■ Power Management Mode

When the H-sync signal / V-sync signal / H and V sync signals from the computer are off, the monitor enters into Power Management Mode which reduces the power consumption to less than 2W. The screen becomes dark, and the power indicator turns to orange. From Power Management Mode, the image reappears in several seconds when either the keyboard or the mouse are touched again.

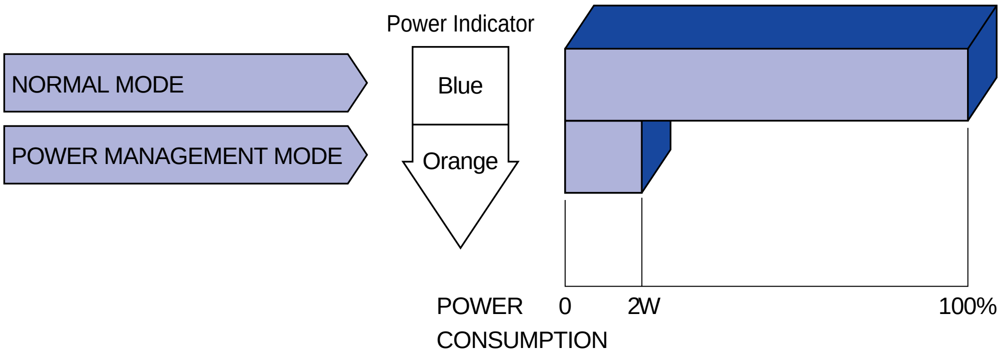

NOTE

- Even when using the power management mode, the monitor consumes electricity. Turn off the Power Switch whenever the monitor is not in use, during the night and weekends, to avoid unnecessary power consumption.
- It is possible that the video signal from the computer may be on while the H or V sync signal is missing. In this instance, the POWER MANAGEMENT feature may not work properly.

TROUBLE SHOOTING

If the monitor fails to operate correctly, please follow the steps below for a possible solution.

1. Perform the adjustments described in OPERATING THE MONITOR, depending on the problem you have. If the monitor does not get a picture, skip to 2.
2. Consult the following items if you cannot find an appropriate adjustment item in OPERATING THE MONITOR or if the problem persists.
3. If you are experiencing a problem which is not described below or you cannot correct the problem, discontinue using the monitor and contact your dealer or iiyama service center for further assistance.

ENGLISH

Problem	Check
A The picture does not appear.	
(Power indicator does not light up.)	☐ The Power Cable is firmly seated in the socket. ☐ The Power Switch is turned ON. ☐ The AC socket is live. Please check with another piece of equipment.
(Power indicator is blue.)	☐ If the blank screen saver is in active mode, touch the keyboard or the mouse. ☐ Increase the Contrast and/or Brightness. ☐ The computer is ON. ☐ The Signal Cable is properly connected. ☐ The signal timing of the computer is within the specification of the monitor.
(Power indicator is orange.)	☐ If the monitor is in power management mode, touch the keyboard or the mouse. ☐ The computer is ON. ☐ The Signal Cable is properly connected. ☐ The signal timing of the computer is within the specification of the monitor.
B The screen is not synchronized.	☐ The Signal Cable is properly connected. ☐ The signal timing of the computer is within the specification of the monitor. ☐ The video output level of the computer is within the specification of the monitor.
C The screen position is not in the center.	☐ The signal timing of the computer is within the specification of the monitor.
D The screen is too bright or too dark.	☐ The video output level of the computer is within the specification of the monitor.
E The screen is shaking.	☐ The power voltage is within the specification of the monitor. ☐ The signal timing of the computer is within the specification of the monitor.

Problem	Check
F No sound.	☐ The audio equipment (computer etc.) is ON. ☐ The Audio Cable is properly connected. ☐ The Volume is turned up. ☐ The Mute is OFF. ☐ The audio output level of the audio equipment is within the specification of the monitor.
G The sound is too loud or too quiet.	☐ The audio output level of the audio equipment is within the specification of the monitor.
H A strange noise is heard.	☐ The Audio Cable is properly connected.

ENGLISH

APPENDIX

SPECIFICATIONS: ProLite E1902S

LCD Panel	Driving system	a-Si TFT Active Matrix
	Size	Diagonal: 48cm / 19"
	Pixel pitch	0.294mm H × 0.294mm V
	Brightness	300cd/m^2 (Typical)
	Contrast ratio	1000 : 1 (Typical)
	Viewable angle	Right / Left / Up / Down: 80 degrees each
	Response time	5ms (Black, white, black), 2ms (Gray to Gray)
Display Colors		Approx. 16.7 million maximum
Sync Frequency		Analog: Horizontal 24.0-80.0kHz, Vertical 55-75Hz Digital: Horizontal 31.0-80.0kHz, Vertical 55-75Hz
Dot Clock		135MHz maximum
Maximum Resolution		1280 × 1024, 1.3 MegaPixels
Input Connector		D-Sub mini 15pin, DVI-D 24pin
Plug & Play		VESA DDC2B™
Input Sync Signal		Separate sync: TTL, Positive or Negative
Input Video Signal		Analog: 0.7Vp-p (Standard), 75Ω, Positive Digital: DVI (Digital Visual Interface Standard Rev.1.0) compliance
Input Audio Connector		ø 3.5mm mini jack (Stereo)
Input Audio Signal		0.7Vrms maximum
Speakers		1.0W × 2 (Stereo speakers)
Maximum Screen Size		376.3mm W × 301.1mm H / 14.8" W × 11.9" H
Power Source		100-240VAC, 50/60Hz, 1.5A
Power Consumption		42W maximum, Power management mode: 2W maximum*
Dimensions / Net Weight		407.5 × 407.0 × 210.0mm / 16.0 × 16.0 × 8.3" (W×H×D), 4.9kg / 10.8lbs
Tilt Angle		Up: 20 degrees, Down: 5 degrees
Environmental Considerations		Operating: Temperature 5 to 35°C / 41 to 95°F Humidity 10 to 80% (No condensation) Storage: Temperature -20 to 60°C / -4 to 140°F Humidity 5 to 85% (No condensation)
Approvals		TCO '03, CE, TÜV-GS, TÜV-Ergonomics, FCC-B, UL / C-UL, VCCI-B, GOST-R, CCC

NOTE * Condition: Audio equipment is not connected.

ENGLISH

SPECIFICATIONS: ProLite E1902WS

LCD Panel	Driving system	a-Si TFT Active Matrix
	Size	Diagonal: 48cm / 19"
	Pixel pitch	0.285mm H × 0.285mm V
	Brightness	400cd/m^2 (Typical)
	Contrast ratio	1000 : 1 (Typical)
	Viewable angle	Right / Left: 85 degrees each, Up / Down: 80 degrees each
	Response time	5ms (Black, white, black), 2ms (Gray to Gray)
Display Colors		Approx. 16.7 million maximum
Sync Frequency		Analog: Horizontal 24.0-80.0kHz, Vertical 55-75Hz Digital: Horizontal 31.0-80.0kHz, Vertical 55-75Hz
		137MHz maximum
Maximum Resolution		1440 × 900, 1.3 MegaPixels
Input Connector		D-Sub mini 15pin, DVI-D 24pin
Plug & Play		VESA DDC2B™
Input Sync Signal		Separate sync: TTL, Positive or Negative
Input Video Signal		Analog: 0.7Vp-p (Standard), 75Ω, Positive Digtal: DVI (Digital Visual Interface Standard Rev.1.0) compliance
Input Audio Connector		ø 3.5mm mini jack (Stereo)
Input Audio Signal		0.7Vrms maximum
Speakers		1.0W × 2 (Stereo speakers)
Maximum Screen Size		410.4mm W × 256.5mm H / 16.2" W × 10.1" H
Power Source		100-240VAC, 50/60Hz, 1.5A
Power Consumption		42W maximum, Power management mode: 2W maximum*
Dimensions / Net Weight		438.5 × 363.0 × 210.0mm / 17.3 × 14.3 × 8.3" (W×H×D), 4.3kg / 9.5lbs
Tilt Angle		Up: 20 degrees, Down: 5 degrees
Environmental Considerations		Operating: Temperature 5 to 35°C / 41 to 95°F Humidity 10 to 80% (No condensation) Storage: Temperature -20 to 60°C / -4 to 140°F Humidity 5 to 85% (No condensation)
Approvals		TCO ’06, CE, TÜV-GS, TÜV-Ergonomics, FCC-B, UL / C-UL, VCCI-B, GOST-R, CCC

NOTE * Condition: Audio equipment is not connected.

SPECIFICATIONS: ProLite E1902WSV

LCD Panel	Driving system	a-Si TFT Active Matrix
	Size	Diagonal: 48cm / 19"
	Pixel pitch	0.285mm H × 0.285mm V
	Brightness	400cd/m^2 (Typical)
	Contrast ratio	1000 : 1 (Typical)
	Viewable angle	Right / Left: 85 degrees each, Up / Down: 80 degrees each
	Response time	5ms (Black, white, black), 2ms (Gray to Gray)
Display Colors		Approx. 16.7 million maximum
Sync Frequency		Analog: Horizontal 24.0-80.0kHz, Vertical 55-75Hz
Dot Clock		137MHz maximum
Maximum Resolution		1440 × 900, 1.3 MegaPixels
Input Connector		D-Sub mini 15pin
Plug & Play		VESA DDC2B™
Input Sync Signal		Separate sync: TTL, Positive or Negative
Input Video Signal		Analog: 0.7Vp-p (Standard), 75Ω, Positive
Input Audio Connector		ø 3.5mm mini jack (Stereo)
Input Audio Signal		0.7Vrms maximum
Speakers		1.0W × 2 (Stereo speakers)
Maximum Screen Size		410.4mm W × 256.5mm H / 16.2" W × 10.1" H
Power Source		100-240VAC, 50/60Hz, 1.5A
Power Consumption		42W maximum, Power management mode: 2W maximum*
Dimensions / Net Weight		438.5 × 363.0 × 210.0mm / 17.3 × 14.3 × 8.3" (W×H×D), 4.3kg / 9.5lbs
Tilt Angle		Up: 20 degrees, Down: 5 degrees
Environmental Considerations		Operating: Temperature 5 to 35°C / 41 to 95°F Humidity 10 to 80% (No condensation) Storage: Temperature -20 to 60°C / -4 to 140°F Humidity 5 to 85% (No condensation)
Approvals		TCO '06, CE, TÜV-GS, TÜV-Ergonomics, FCC-B, UL / C-UL, VCCI-B, GOST-R, CCC

NOTE * Condition: Audio equipment is not connected.

ENGLISH

SPECIFICATIONS: ProLite B1902S

LCD Panel	Driving system	a-Si TFT Active Matrix
	Size	Diagonal: 48cm / 19"
	Pixel pitch	0.294mm H × 0.294mm V
	Brightness	300cd/m^2 (Typical)
	Contrast ratio	1000 : 1 (Typical)
	Viewable angle	Right / Left / Up / Down: 80 degrees each
	Response time	5ms (Black, white, black), 2ms (Gray to Gray)
Display Colors		Approx. 16.7 million maximum
Sync Frequency		Analog: Horizontal 24.0-80.0kHz, Vertical 55-75Hz Digital: Horizontal 31.0-80.0kHz, Vertical 55-75Hz
Dot Clock		135MHz maximum
Maximum Resolution		1280 × 1024, 1.3 MegaPixels
Input Connector		D-Sub mini 15pin, DVI-D 24pin
Plug & Play		VESA DDC2B™
Input Sync Signal		Separate sync: TTL, Positive or Negative
Input Video Signal		Analog: 0.7Vp-p (Standard), 75Ω, Positive Digital: DVI (Digital Visual Interface Standard Rev.1.0) compliance
Input Audio Connector		ø 3.5mm mini jack (Stereo)
Input Audio Signal		0.7Vrms maximum
Speakers		1.0W × 2 (Stereo speakers)
Maximum Screen Size		376.3mm W × 301.1mm H / 14.8" W × 11.9" H
Power Source		100-240VAC, 50/60Hz, 1.5A
Power Consumption		42W maximum, Power management mode: 2W maximum*
Dimensions / Net Weight		407.5 × 393.0-503.0 × 236.5mm / 16.0 × 15.5-19.8 × 9.3" (W×H×D), 6.0kg / 13.2lbs
Tilt Angle		Up: 25 degrees, Down: 5 degrees
Environmental Considerations		Operating: Temperature 5 to 35°C / 41 to 95°F Humidity 10 to 80% (No condensation) Storage: Temperature -20 to 60°C / -4 to 140°F Humidity 5 to 85% (No condensation)
Approvals		TCO '03, CE, TÜV-GS, TÜV-Ergonomics, FCC-B, UL / C-UL, VCCI-B, GOST-R, CCC

NOTE * Condition: Audio equipment is not connected.

DIMENSIONS : ProLite E1902S

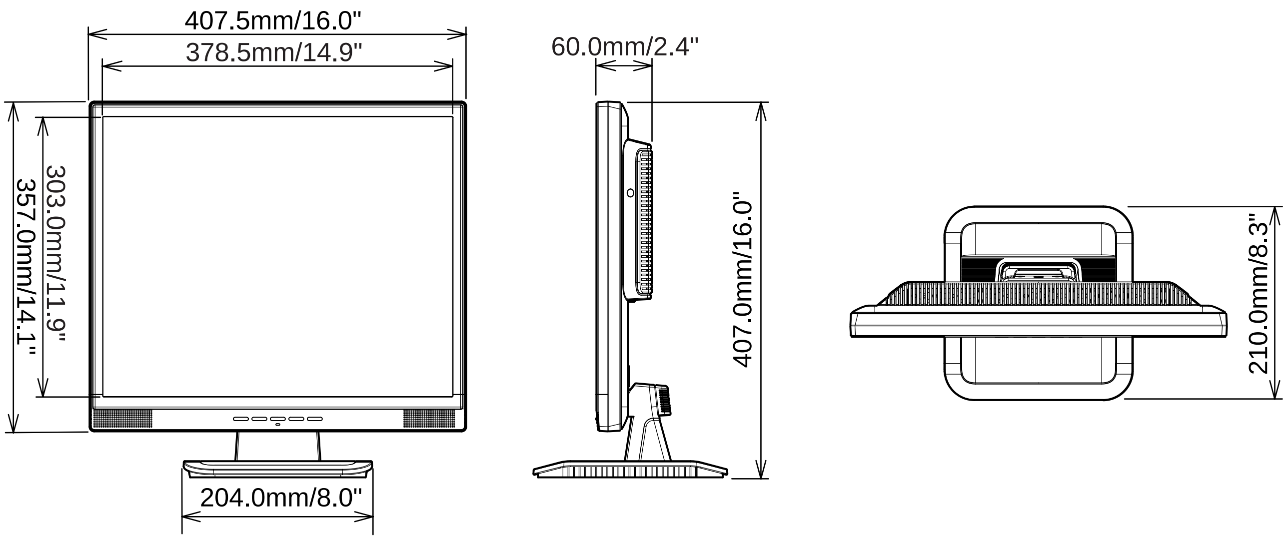

ENGLISH

DIMENSIONS : ProLite E1902WS / E1902WSV

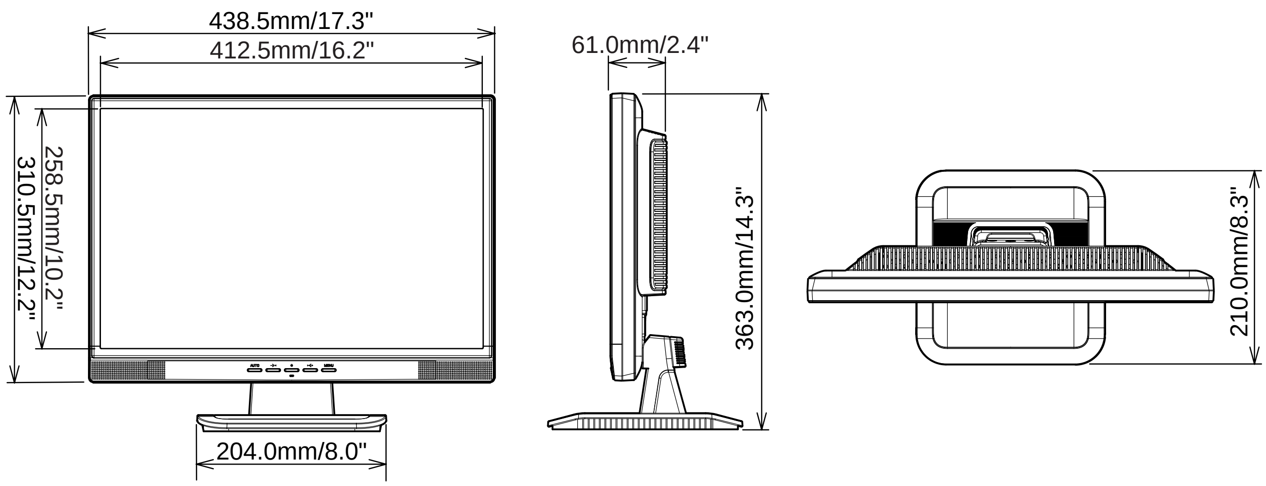

DIMENSIONS : ProLite B1902S

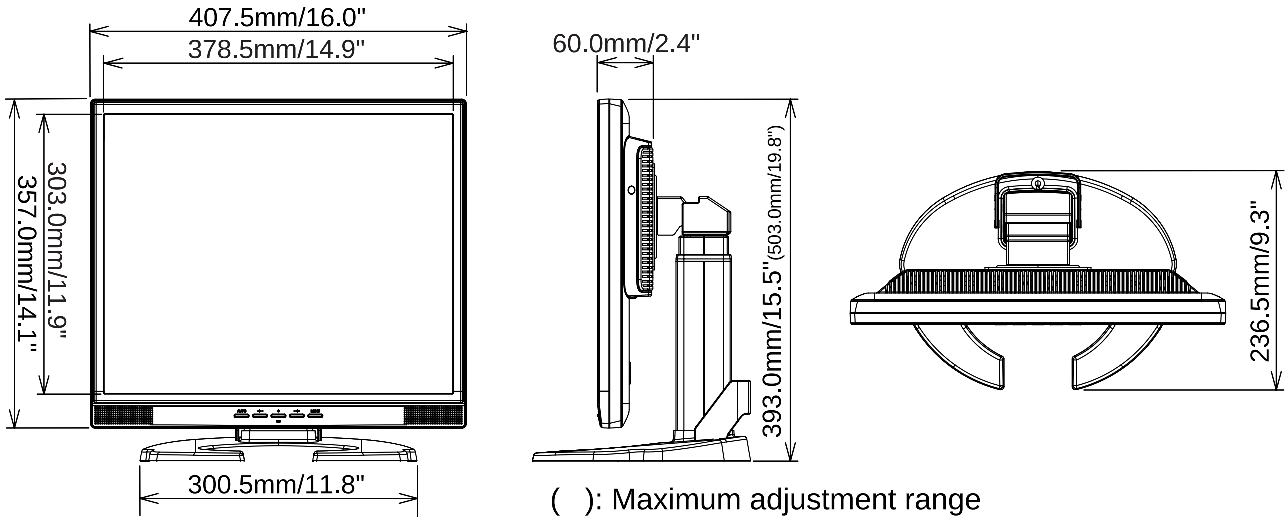

( ): Maximum adjustment range

ENGLISH

COMPLIANT TIMING

Video Mode			Horizontal Frequency	Vertical Frequency	Dot Clock	
VESA	VGA	640 × 480	31.469kHz	59.940Hz	25.175MHz	
			37.500kHz	75.000Hz	31.500MHz	
			37.861kHz	72.809Hz	31.500MHz	
	SVGA	800 × 600	35.156kHz	56.250Hz	36.000MHz	
			37.879kHz	60.317Hz	40.000MHz	
			46.875kHz	75.000Hz	49.500MHz	
			48.077kHz	72.188Hz	50.000MHz	
	XGA	1024 × 768	48.363kHz	60.004Hz	65.000MHz	
			56.476kHz	70.069Hz	75.000MHz	
			60.023kHz	75.029Hz	78.750MHz	
	WXGA	1280 × 768	47.776kHz	59.870Hz	79.500MHz	*1
			60.289kHz	74.893Hz	102.250MHz	*1
	SXGA	1152 × 864	67.500kHz	75.000Hz	108.000MHz	
		1280 × 1024	63.981kHz	60.020Hz	108.000MHz	
			79.976kHz	75.025Hz	135.000MHz	
	WXGA+	1440 × 900	55.935kHz	59.887Hz	106.500MHz	*1
			70.635kHz	74.984Hz	136.750MHz	*1
VGA TEXT		720 × 400	31.469kHz	70.087Hz	28.322MHz	*2
Macintosh		640 × 480	35.000kHz	66.667Hz	30.240MHz	*2
		832 × 624	49.725kHz	74.500Hz	57.283MHz	*2
		1024 × 768	60.150kHz	74.720Hz	80.000MHz	*2
PC9801		640 × 400	24.827kHz	56.424Hz	21.053MHz	*2

NOTE *1 Available for ProLite E1902WS / E1902WSV only.

*2 DVI input is not compliant.

CONNECTOR PIN ASSIGNMENT

■ D-Sub mini 15pin Connector

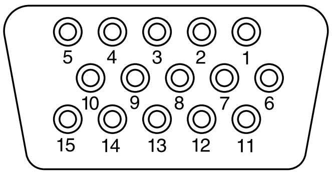

D-SUB

Pin	Input Signal	Pin	Input Signal
1	Red video	9	
2	Green video	10	Ground
3	Blue video	11	Reserved port
4	Reserved port	12	Data line (SDA)*
5	Ground	13	H-Sync
6	Red video ground	14	V-Sync
7	Green video ground	15	Clock line (SCL)*
8	Blue video ground		

* Compliant to VESA DDC.

■ DVI-D 24pin Connector

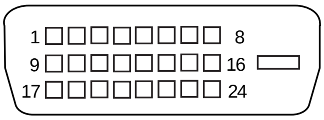

DVI-D

Pin	Input Signal	Pin	Input Signal
1	T.M.D.S Data 2–	13	
2	T.M.D.S Data 2+	14	
3	T.M.D.S Data 2 Ground	15	Ground
4		16	Hot Plug Detect
5		17	T.M.D.S Data 0–
6	Clock line (SCL) *	18	T.M.D.S Data 0+
7	Data line (SDA) *	19	T.M.D.S Data 0 Ground
8		20	
9	T.M.D.S Data 1–	21	
10	T.M.D.S Data 1+	22	T.M.D.S Clock Ground
11	T.M.D.S Data 1 Ground	23	T.M.D.S Clock +
12		24	T.M.D.S Clock –

* Compliant to VESA DDC.